LEXICON™

QUARTZ COMPOSITE SINKS

PLATINUM COLLECTION

SINK SPECIFICATIONS

LEXICON™ Platinum Collection

LP-7030

FEATURES

- Made from 80% quartz, only diamond is harder
- Durable; highly resistant to scratches and stains
- Non-porous surface, easy-to-clean
- Extremely hygienic, does not absorb bacteria
- Heat resistant to +500°F
- True undermount design, can also be topmounted
- PerfectFit drains for easy cleaning



STANDARDS

- Complies with ANSI Z124.6-2007
- Complies with EN 13310:2003

INCLUDED ACCESSORIES

- Sink Grids
- Color Matched Strainer Basket
- Color Matched Disposal Flange*

SUPPORT DOCUMENTS

- Installation instructions available online
- Maintenance & cleaning information available online
- Warranty information available online

WARRANTY

Limited Lifetime – Residential

AVAILABLE COLORS

Shown in Black

☐ Black (K) ☐ Mocha (M) ☐ Concrete (C) ☐ White (W) ☐ Beige (B)

DIMENSIONS

Specifications and dimensions are not guaranteed and are subject to change without notice.

OVERALL
32" x 20½"

BOWL DEPTH
9½" | 8"

DRAIN DIAMETER
3-½"

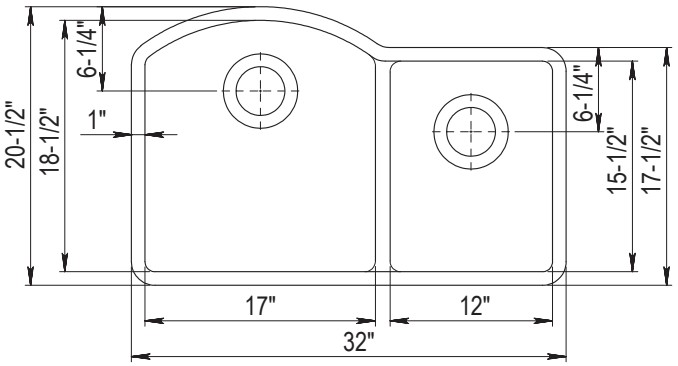

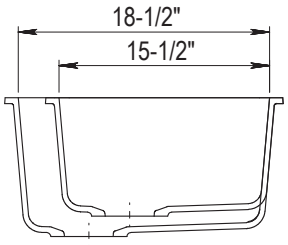

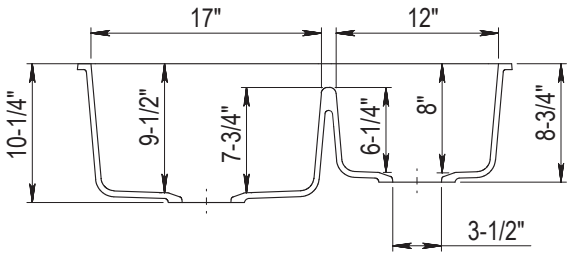

CARE AND CLEANING INSTRUCTIONS

Clean using warm water and a clean soft cloth, sponge or Mr. Clean® Magic Eraser®. Non-abrasive cleaners such as Bar Keepers Friend® or Soft Scrub® and detergents can also be used. Hard water, calcium and lime deposits can be removed with a 1:1 water and white vinegar solution and rinsing after 20 minutes. To restore color luster and extend the time between cleanings apply mineral oil or a commercial product such as Weiman® Granite Cleaner & Polish. Staining liquids such as wine, juice, and dyes should be rinsed off as soon as possible. Do not use abrasive cleaners, metal-scouring pads, bleach, ammonia, or other alkali cleaners.

EZ undermount clips (10 sets) and paper cutout template included. DXF cutout templates are available online.

JOB INFORMATION

Job Name: _____

Contact: _____

Date Specified: _____

Specifier: _____

Contractor: _____

©2015 07/15 LPSPEC-001