KOHLER®

Cairn® | K-8204

33-1/2" undermount double-bowl kitchen sink

Features

- 36" minimum base cabinet width
- Large/medium bowls
- Versatile design allows large bowl to be installed on the right or left
- Large bowl depth: 9-1/2" (241 mm); small bowl depth: 7-1/2" (191 mm)
- Slim divider creates more space while allowing you to completely submerge pots and pans
- Offset drain in larger bowl increases workspace in the sink
- Includes sink rack
- Includes cutout templates and installation clips
- Matte finish offers rich, dimensional color



Available Colors/Finishes

Color tiles intended for reference only.

- CM6 Matte White
- CM7 Matte Graphite
- CM1 Matte Black
- CM2 Matte Brown
- CM3 Matte Taupe
- CM4 Matte Grey

1-800-4KOHLER (1-800-456-4537)
Kohler Co. reserves the right to make revisions without notice to product specifications.
For the most current specification sheet, go to www.kohler.com USA or www.kohler.ca Canada.
11-03-2026 15:09 - US-CA

THE BOLD LOOK OF KOHLER®

Codes/Standards

CSA B45.5/IAPMO Z124

Technical Information

All product dimensions are nominal.

Drain Hole Diameter:	3-7/8" (98 mm)
Minimum Base Cabinet Width:	36" (914 mm)
Basin Configuration:	Large Bowl on Left
Left Basin Length:	18-7/16" (468 mm)
Left Basin Width:	15-3/16" (386 mm)
Left Basin Depth:	9-1/2" (241 mm)
Right Basin Length:	11-15/16" (303 mm)
Right Basin Width:	16-3/8" (416 mm)
Right Basin Depth:	7-1/2" (191 mm)

Material

- KOHLER Neoroc® composite is durable and built to withstand day-to-day cleaning tasks
- Solid color throughout the sink
- Heat-resistant up to 750°F
- Scratch-, stain-, chip-, and thermal-shock-resistant

Included Components

- K-5655 Stainless steel sink rack, 17-1/4" x 14”, for large bowl (QTY 1)

Recommended Products/Accessories

- K-5198 Stainless steel sink rack, 10-3/8" x 14-1/4", for small bowl
- [object Object]23726 Drain treatment
- K-23730 Neoroc cleaner
- K-8801 Sink drain and strainer with tailpiece
- K-8799 Sink drain and strainer basket, less tailpiece
- K-11352 Disposal flange with stopper
- K-9000 Adjustable P-trap with tubing outlet, 1-1/2" x 1-1/2"

Warranty

See website for detailed warranty information.

KOHLER® Neoroc® Sinks Lifetime Limited Warranty

1-800-4KOHLER (1-800-456-4537)
Kohler Co. reserves the right to make revisions without notice to product specifications.
For the most current specification sheet, go to www.kohler.com USA or www.kohler.ca Canada.
11-03-2026 15:09 - US-CA

THE BOLD LOOK OF KOHLER.

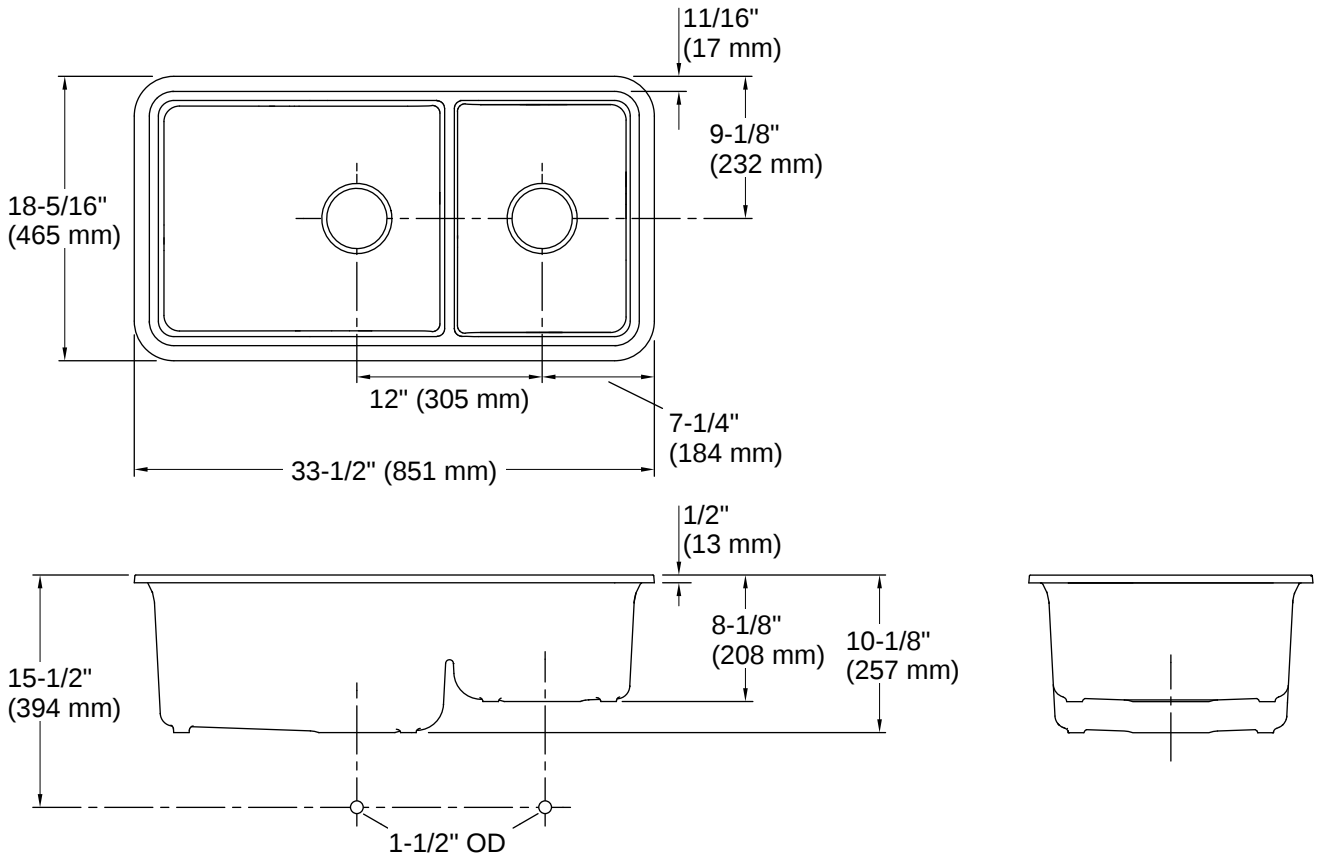

Installation

- Undermount
- Easy to install in a one-person, single-day project

Installation Notes

Install this product according to the installation instructions.

1-800-4KOHLER (1-800-456-4537)
Kohler Co. reserves the right to make revisions without notice to product specifications.
For the most current specification sheet, go to www.kohler.com USA or www.kohler.ca Canada.
11-03-2026 15:09 - US-CA

THE BOLD LOOK OF KOHLER.